CONFIG :H7910-H4NQ5-B5140	Manual Isolation delay: 40 Seconds	Alarm 1: N/O Active 2mins after LVT
KIT No : K98 (24v)	Low voltage threshold: 24.1	Alarm 2: N/O Active 3mins after LVT

THESE INSTRUCTIONS ARE ONLY TO BE USED AS A GUIDE. IT IS THE INSTALLERS RESPONSIBILITY TO VALIDATE FOR EACH INSTALLATION
INTELLITECMV Ltd CAN NOT BE HELD RESPONSIBLE FOR VEHICLE VARIATIONS

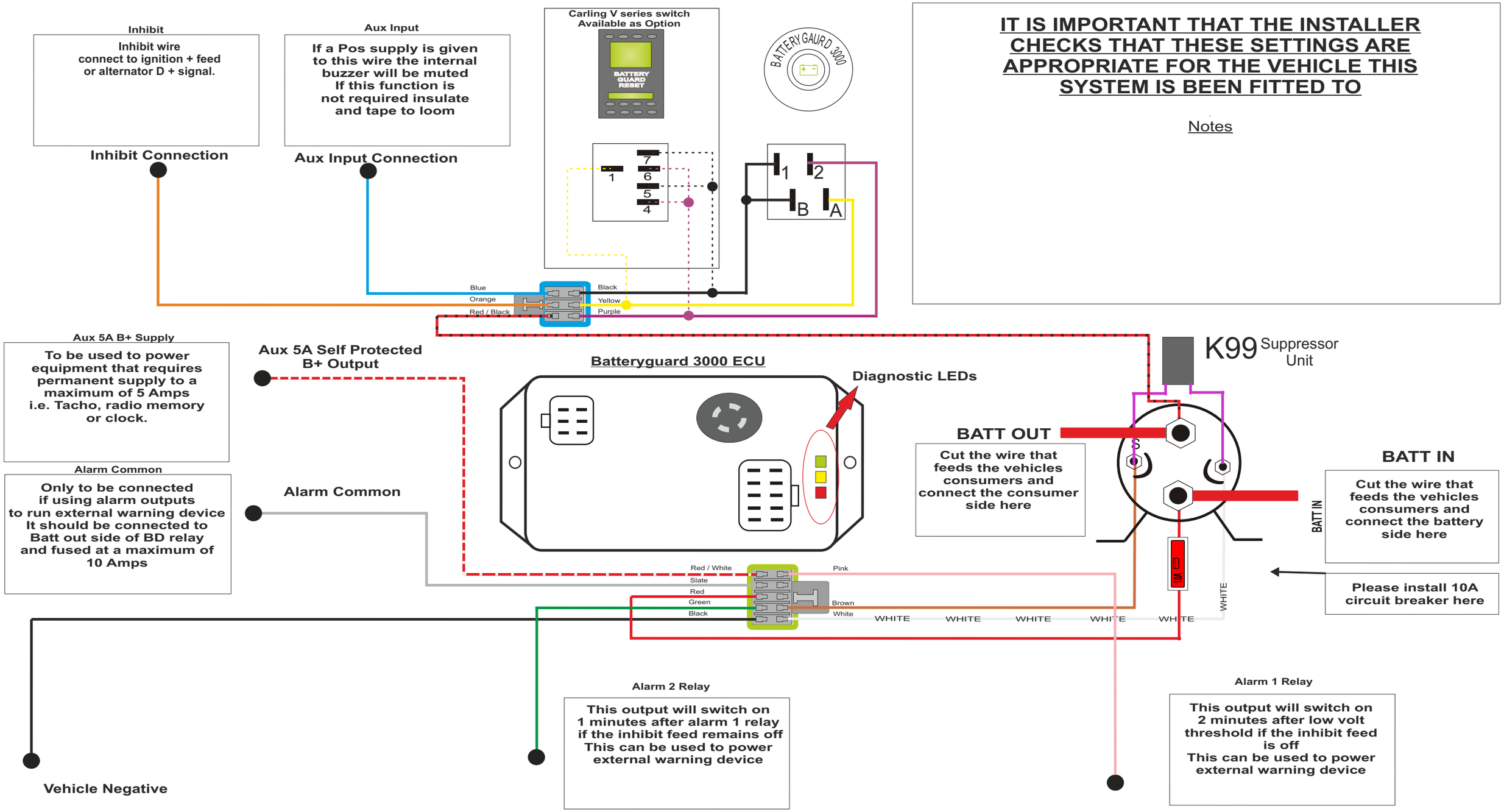

Reason for Issue Change: Change 10A Fuse to 10A Circuit Breaker

Draw number : BG3K-000821	Drawn : S Kelley	Revised: 19/10/23 JH Issue Level: E	Check : T.H. ☐ D.Y. ☒	Date :13-1-09	Scale : NTS	Filepath : Battery Management\Revision D

Intellitec Technical Services
Speciality Vehicle Electronics Division

Technical Helpline
0151 4828970

Title : 24 VOLT 200AMP STANDARD

BATTERY GUARD3K